T&S BRASS AND BRONZE WORKS, INC.
2 SADDLEBACK COVE / P.O. BOX 1088 / TRAVELERS REST, SC 29690
PHONE 800-476-4103 FAX 864- 834-3518

REG.#A2601
ISO #9002

Model No.
B-1431
Item No.:

Job Name:

Architect/Engineer Approval:

Notes:

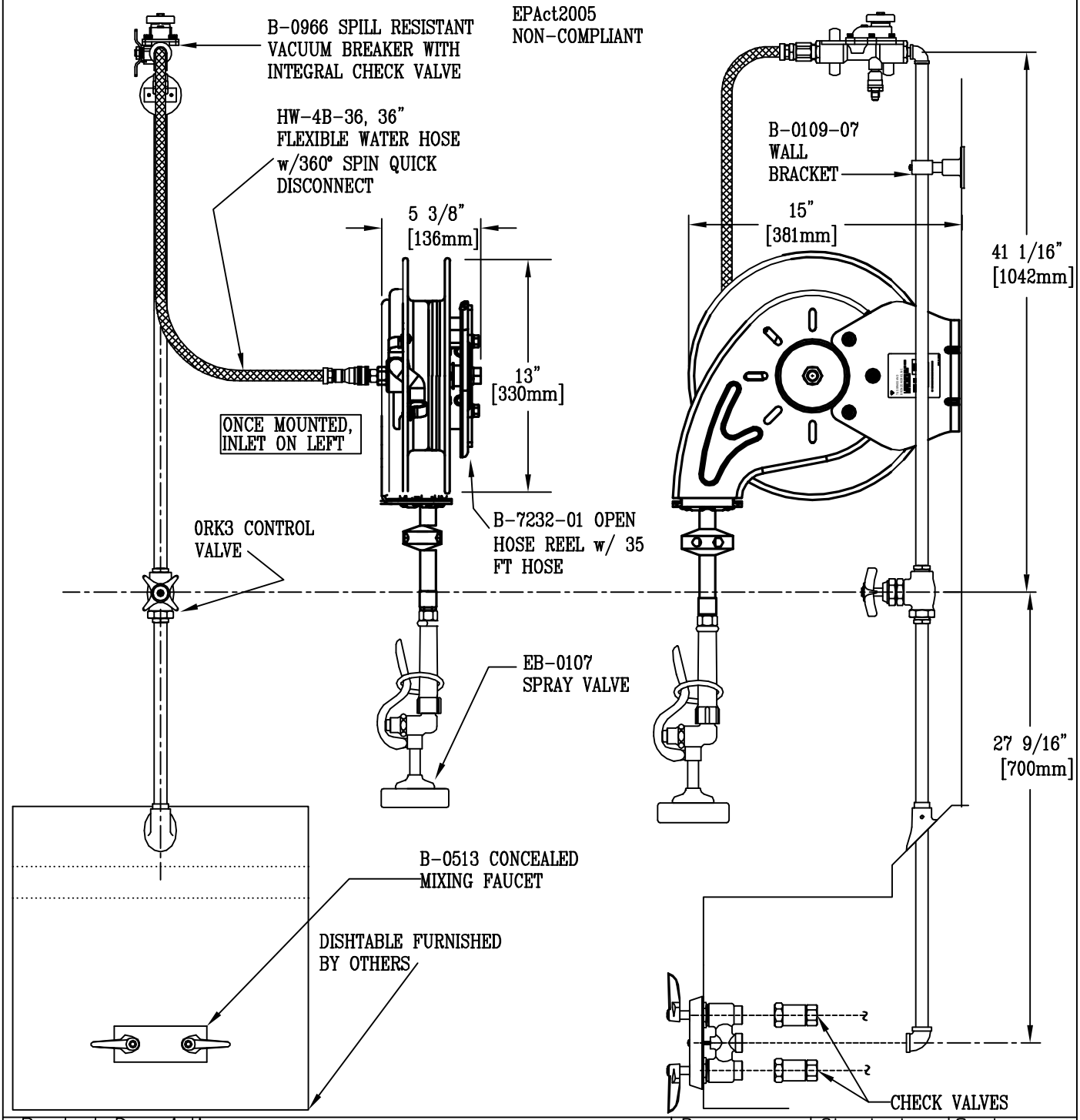

Product Description:
B-7232-01 "REEL KLEEN" OPEN HOSE REEL w/35 FT HOSE, EB-0107 SPRAY VALVE, B-0966 VACUUM BREAKER, HW-4B-36 FLEXIBLE HOSE ASSY, ORK-3 SHUT-OFF VALVE AND B-0513 MIXING FAUCET

Drawn:	Checked	Scale:
JRM	JRM	1:8
Approved		Date:
JHB		1/4/06